Please Approve this Drawing	
Date	
Signature	

NO.	Part Nome	Q'TY	Material	Plated surface
1	Plunger	1	C3604	AU 0.5μm Min. OVER 0.25 μm Ni
2	Barrel	1	C3604	AU 0.25μm Min. OVER 0.25 μm Ni
3	Pin	1	C3604	AU 0.25μm Min. OVER 0.25 μm Ni
4	Spring	1	SUS304	AU 0.05μm Min. OVER 0.25 μm Ni

Notes:

1.Electrical

- Rated Current&Voltage:DC 12V 1A
- Contact Resistance:30 mohm maximum at Working Height(quiescence)

2.Mechanical

- Durability:50000 Cycles(minimum)

3.To ensure the best usage,please operate it based on the working Height

- Based on the Engineering Drawings,shall not exceed the maximum allowed compression

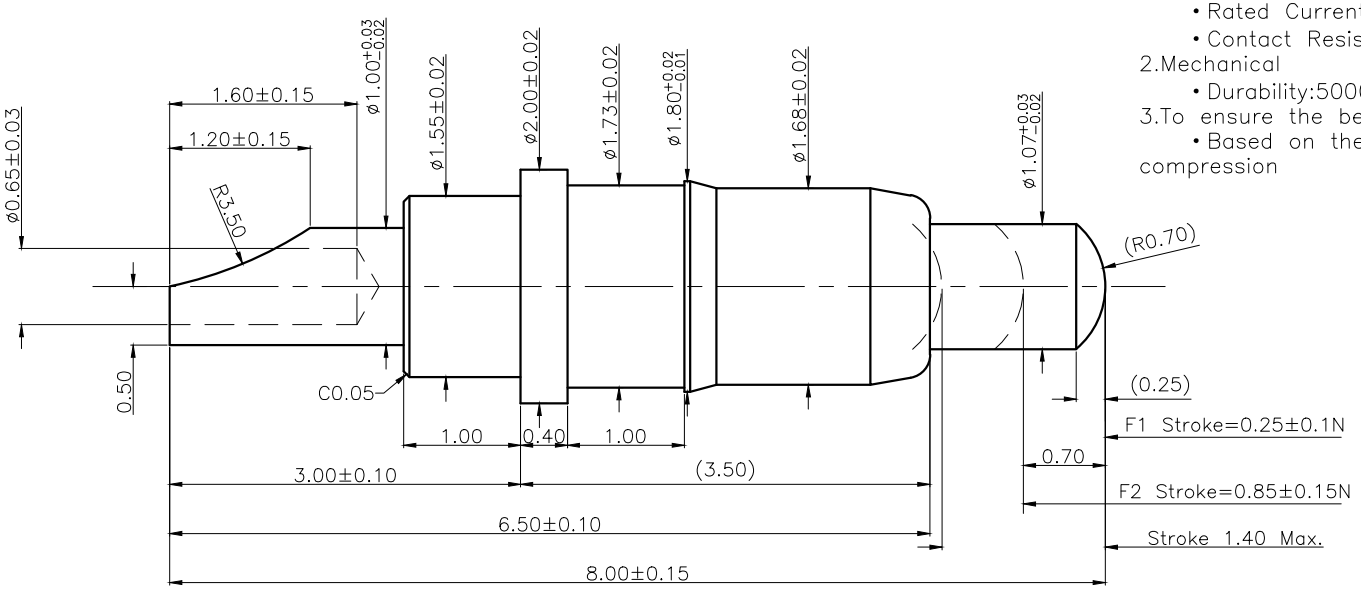

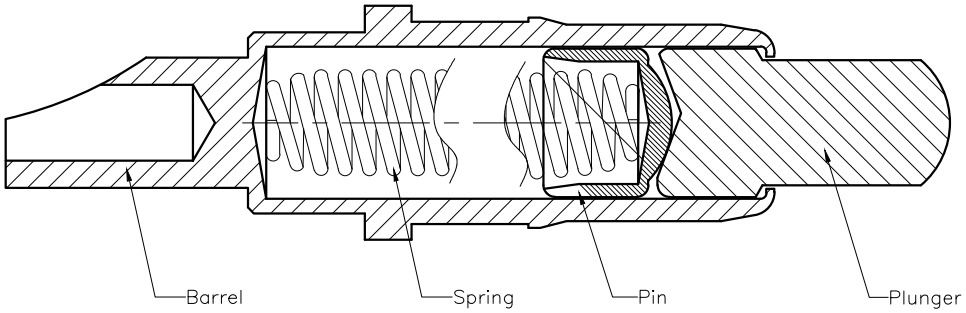

DRAWN	Ant	DATE	2014.08.07			Dongguan Promax Electronics Technology Co., Ltd
CHECKED		SCALE	10:1	VER.	B.0	
APPROVED		TITLE	pogo pin connector.			Ang: 0 ±1° .0 ±0.5° .00 ±0.25° / Dim: 0 ±0.15 .0 ±0.10 .00 ±0.05
PROJECT		DRAWING NO.	C039-01			
SHEET	1 of 1	UNIT	mm			

VER.	DESCRIPTION	ECN NO.	DATE