Please Approve this Drawing	
Date	
Signature	

NO.	Part Nome	Q'TY	Material	Plated surface
1	Plunger	3	C3604	AU 3 U" MIN OVER 50~100 U" NI
2	Barrel	3	C3604	AU 3 U" MIN OVER 50~100 U" NI
3	Spring	3	SUS304	Not Plated
3	Housing	1	ABS	Black

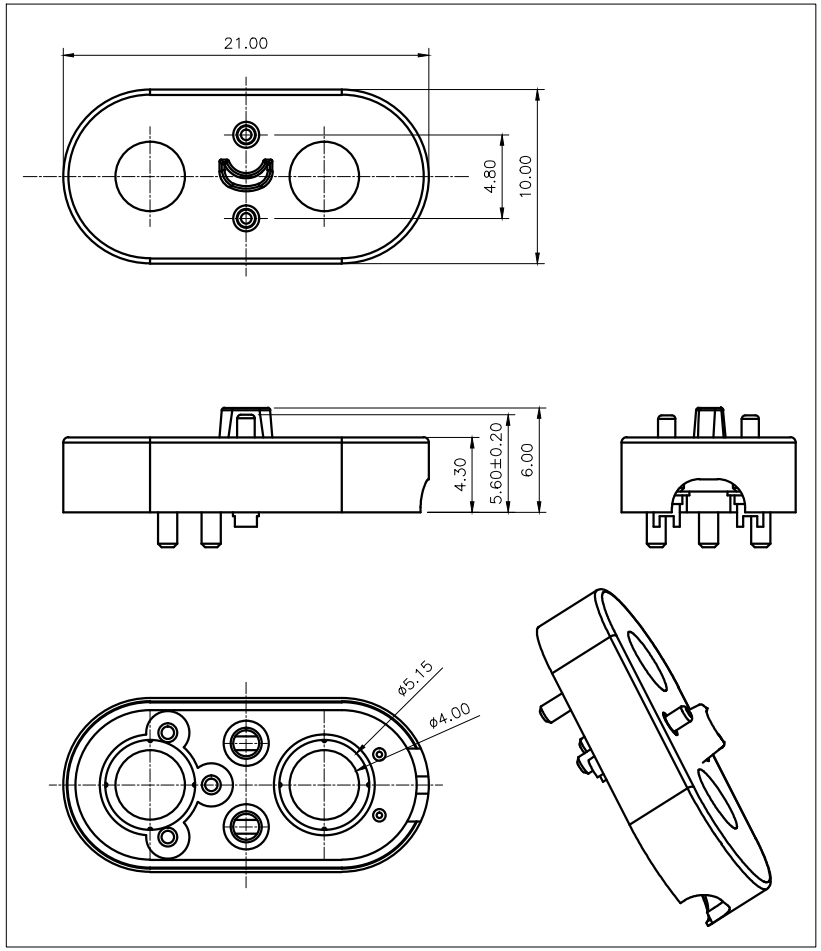

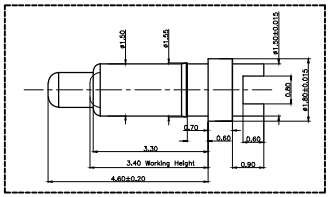

POGO PIN CONNECTOR

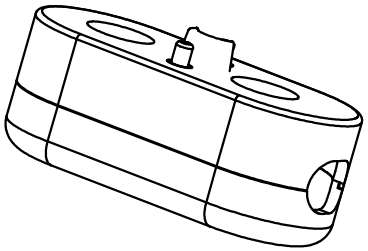

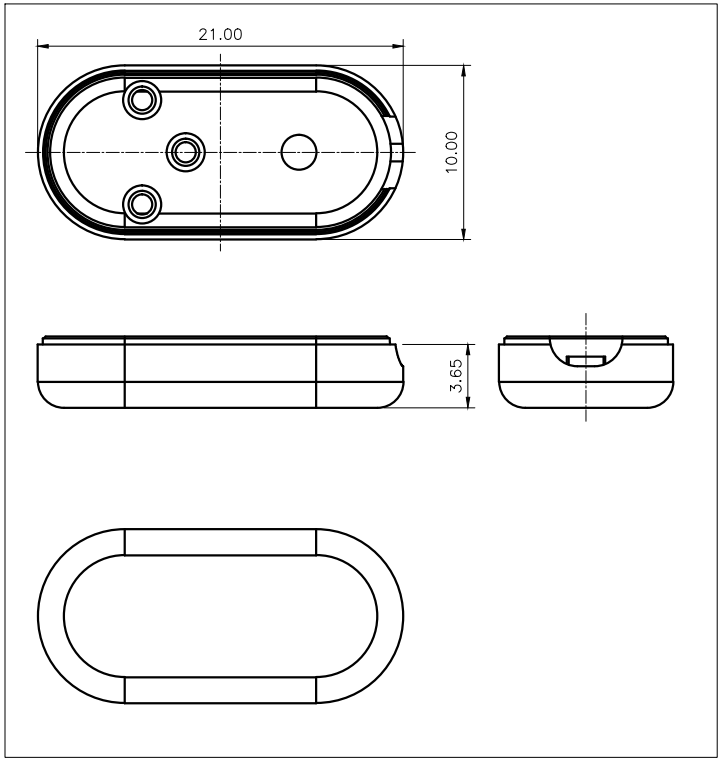

Notes:
1.Electrical
- Rated Current&Voltage:DC 12V 1A
- Contact Resistance:50 mohm maximum at Working Height(quiescence)

2.Mechanical
- Spring Force :40g±10g at Working Height
- Durability:10000 Cycles(minimum)

3.To ensure the best usage,please operate it based on the working Height
- Based on the Engineering Drawings,shall not exceed the maximum allowed compression

VER.	DESCRIPTION	ECN NO.	DATE

DRAWN	Roy	DATE	2015.07.01			Dongguan Promax Electronics Technology Co., Ltd
CHECKED		SCALE	10:1	VER.	B.0	
APPROVED		TITLE	pogo pin connector.			Ang: 0 ±1° .0 ±0.5° .00 ±0.25° / Dim: 0 ±0.15 .0 ±0.10 .00 ±0.05
PROJECT		DRAWING NO.	C172-02P			
SHEET	1 of 1	UNIT	mm			