Please Approve this Drawing	
Date	
Signature	

NO.	Part Name	Q'TY	Material	Plated surface
1	Plunger	4	Brass	Au 5u" Min. Over 50u" Min. Ni
2	Barrel	4	Brass	AU 5U" MIN OVER 50 U" Min. NI
3	Spring	4	SUS	N/A
4	Housing	1	High temp.	Plastic; UL94 V-0 Color Black
5				

NOTES:

1. Electrical
   .Rated Current & Voltage : DC 12 V ; 1.0A
   .Contact Resistance:25 mohm maximum at Working Height(Quiescence)
   .Insulation Resistance: 1MΩ Min.
2. Mechanical
   .Full store: 0.80 mm
   .Working Store: 0.60 mm
   .Spring Force : 80gf±20gf at Working Store
   .Durability:10,000 cycles(minimum)
3. Environmental
   .Operating Temperature: −40°C~+70°C
   .Humidity Range: 10%RH~90%RH
   .Salt Spray: 48 Hours
4. When the current is greater than 1A then need to increase the time delay circuit(3 second)
5. To avoid arcing issue, The adaptor start to power supply after connector mated fully.
6. To ensure the best usage,please operate it based on the working height.
7. RoHs&HF compliant product.

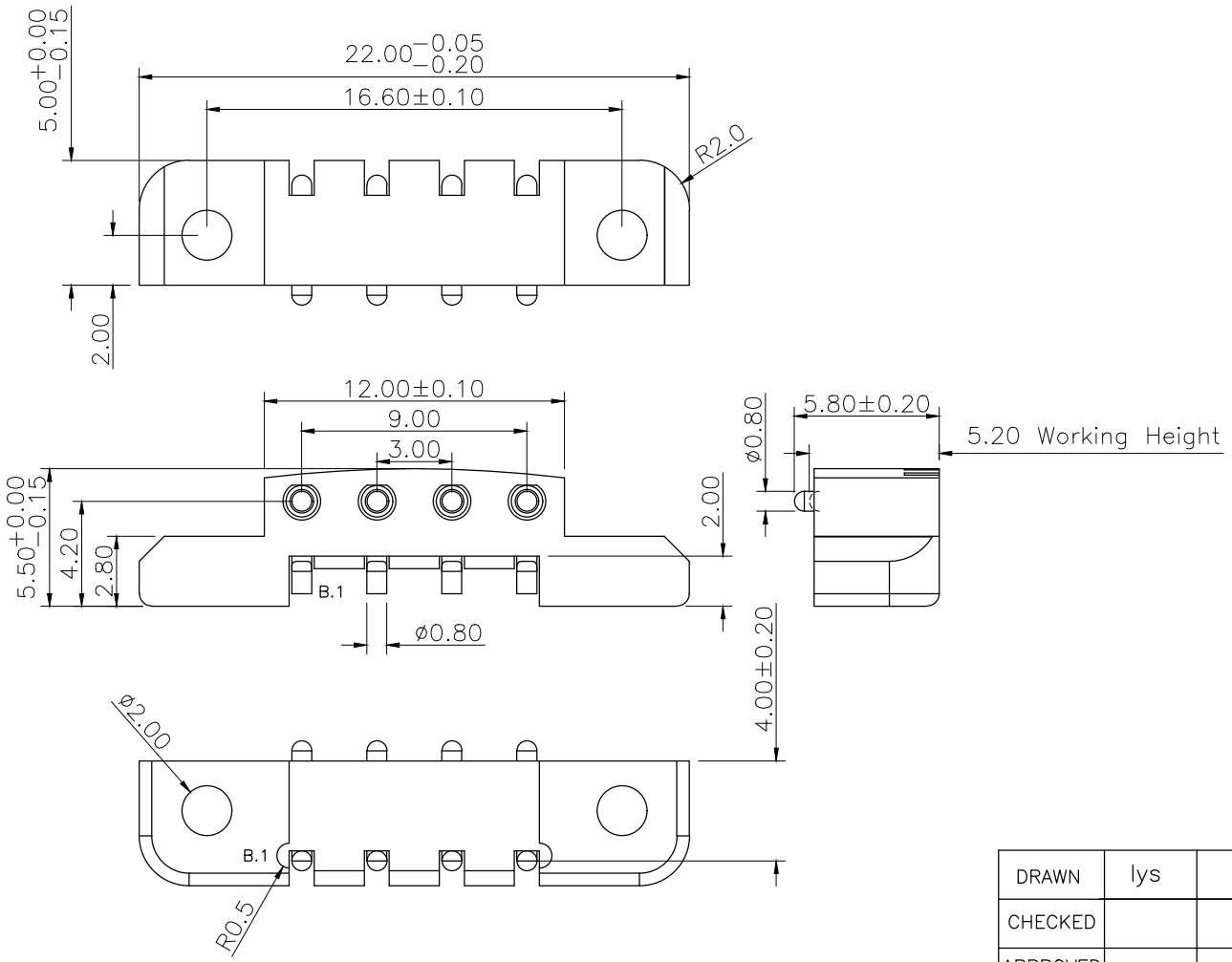

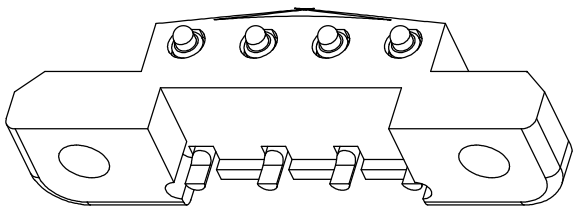

B.1		ECN−20200915−1	2020.09.15
B.0		ECN−20200826−1	2020.08.26
VER.	DESCRIPTION	ECN NO.	DATE

DRAWN	lys	DATE	2020.09.15			Dongguan Promax Electronics Technology Co., Ltd
CHECKED		SCALE	10:1	VER.	B.1	
APPROVED		TITLE	pogo pin connector.			Ang: 0 ±1° .0 ±0.5° .00 ±0.25° / Dim: 0 ±0.15 .0 ±0.10 .00 ±0.05
PROJECT		DRAWING NO.	C2241−04R			
SHEET	1 of 1	UNIT	mm			