Please Approve this Drawing	
Date	
Signature	

NO.	Part Name	Q'TY	Material	Plated surface
1	Plunger	4	Brass	Au 40u" Min. OVER 50U~120" Ni
2	Barrel	4	Brass	Au 2u" Min. OVER 50U~120" Ni
3	Spring	4	SUS304	Au 2u" Min. OVER Ni
4	Housing&CAP	1	High temp.Plastic; UL94 V-0 Color Black	

NOTES:

1. Electrical
   .Rated Current & Voltage : DC 12 V ; 1.0A Max.
   .Contact Resistance: 50 mohm maximum at Working Height(Quiescence)
2. Mechanical
   .Full store: 0.90 mm
   .Working Store: 0.60 mm
   .Spring Force: 0.90N±0.20N at Working Height
   .Durability:10,000 cycles(minimum)
3. Environmental
   .Operating Temperature: -20°C~+85°C
   .Humidity Range: 10%RH~90%RH
   .Salt Spray: 48 Hours
4. When the current is greater than 1A then need to increase the time delay circuit(3 second)
5. To avoid arcing issue, The adaptor start to power supply after connector mated fully.
6. To ensure the best usage,please operate it based on the working height.
7 .RoHs&HF compliant product.

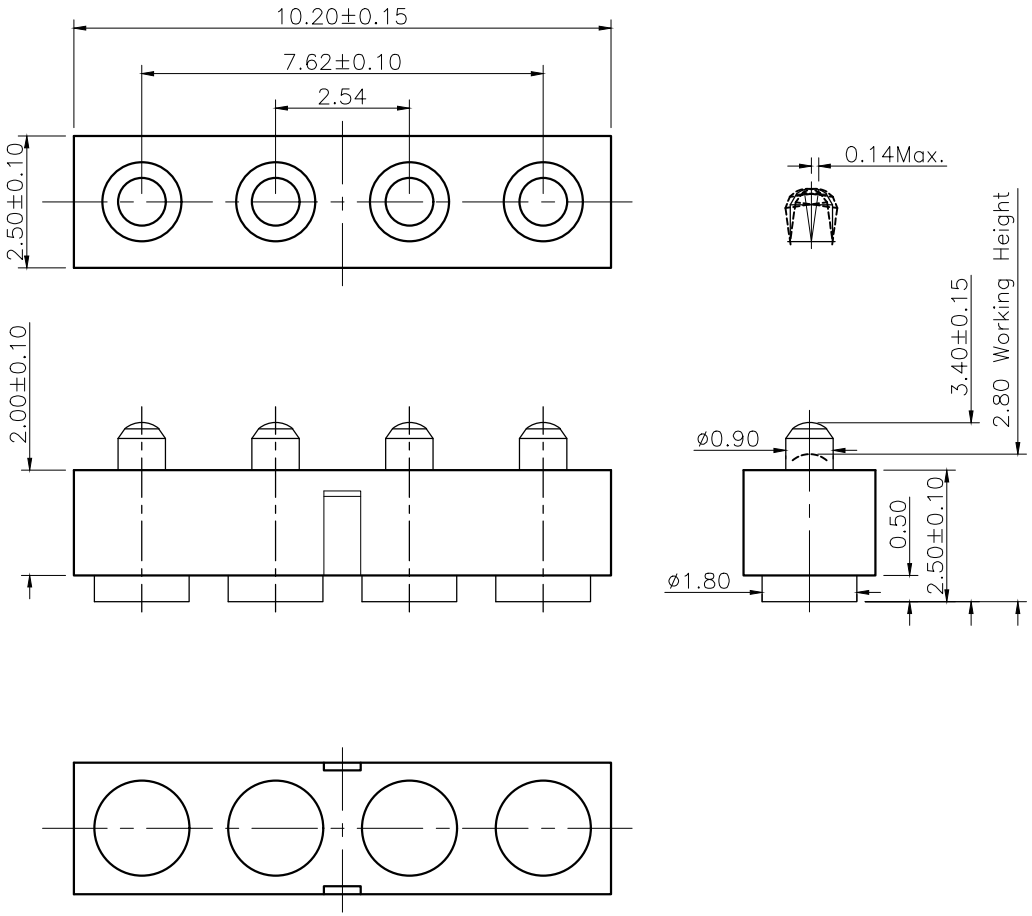

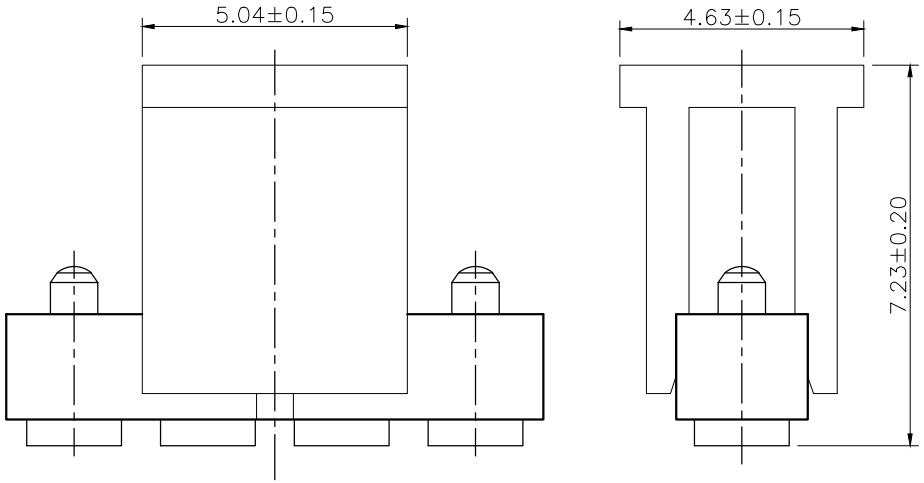

B.0	NEW RELEASE		
VER.	DESCRIPTION	ECN NO.	DATE

DRAWN	Lx	DATE	2021.06.16		
CHECKED	Lys	SCALE	10:1	VER.	B.0
APPROVED	Tonny	TITLE	pogo pin		
PROJECT		DRAWING NO.	NC3457-04RA		
SHEET	1 of 1	UNIT	mm		

Proma Dongguan Promax Electronics Technology Co., Ltd

Ang:		Dim:	
0	±1°	0	±0.15
.0	±0.5°	.0	±0.10
.00	±0.25°	.00	±0.05