Please Approve this Drawing	
Date	
Signature	

NO.	Part Name	Q'TY	Material	Plated surface
1	PIN	1	HBi59	OVER Ni 150~200U+Au2U +Pt 8U Min
2				
3				
4				

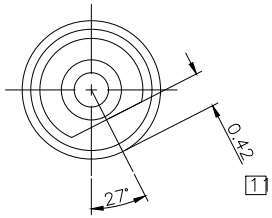

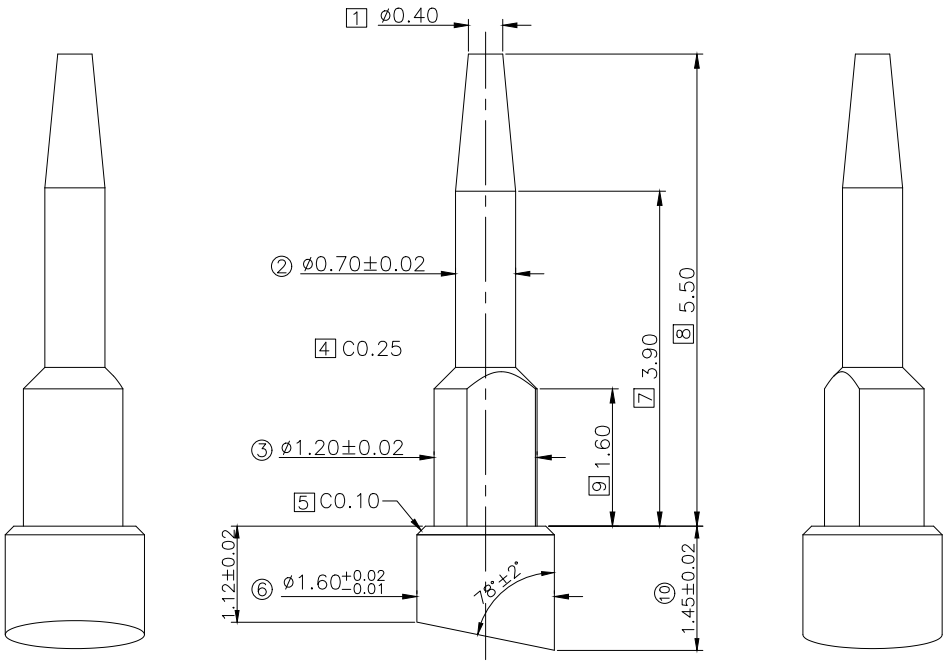

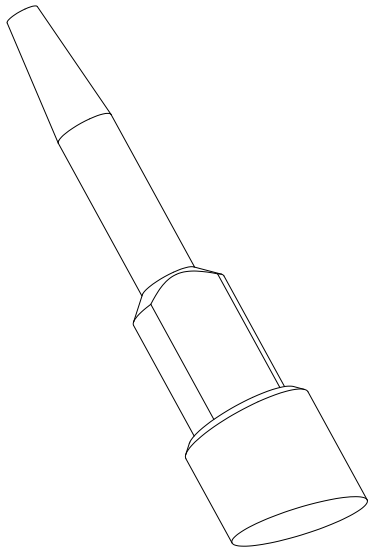

NOTES:

1. Electrical
   .Rated Current & Voltage : DC 12 V ; 1.0A
   .Contact Resistance:50 mohm maximum (Quiescence)
2. Environmental
   .Operating Temperature: −25°C~+85°C
   .Humidity Range: 10%RH~90%RH
   .Salt Spray: 72 Hours
   .Sweat test: 48 Hours
3. RoHs&HF compliant product.

DRAWN	LX	DATE	2022.01.15		Dongguan Promax Electronics Technology Co., Ltd
CHECKED			10:1	VER. X01	
APPROVED		TITLE	GTR 1-R		Ang: 0 ±4° .0 ±2° .00 ±1° / Dim: 0 ±0.15 .0 ±0.10 .00 ±0.05
PROJECT		DRAWING NO.	NF4365-01PA		
SHEET	1 of 1	UNIT	mm		