Please Approve this Drawing	
Date	
Signature	

NO.	Part Nome	Q'TY	Material	Plated surface
1	Plunger	1	C3604	Ni 80~150u"
2	Barrel	1	C3604	Ni 80~150u"
3	Ring	1	SUS 304	N/A
4	Spring	1	SUS304	N/A

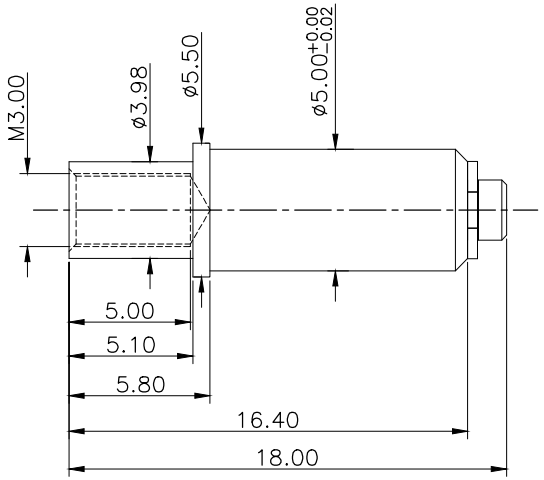

NOTES:

1. Mechanical
   .Full store: 5.10 mm
   .Working Store: 3..00 mm
   .Spring Force: 1000gf±100gf at Normal Working Height
   .Durability:100,000 cycles(minimum)
2. Environmental
   .Operating Temperature: −25°C~+85°C
   .Humidity Range: 10%RH~90%RH
   .Salt Spray: 48 Hours
3. To ensure the best usage,please operate it based on the working height.

DRAWN	Roy	DATE	2019.04.17			Dongguan Promax Electronics Technology Co., Ltd
CHECKED		SCALE	10:1	VER.	B.0	
APPROVED		TITLE	Pogo pin			Ang: 0 ±1° .0 ±0.5° .00 ±0.25° / Dim: 0 ±0.15 .0 ±0.10 .00 ±0.05
PROJECT		DRAWING NO.	C1173-01			
SHEET	1 of 1	UNIT	mm			